Western Products, PO Box 245038, Milwaukee, WI 53224-9538 • www.westernplows.com

October 1, 2026
Lit. No. 94116, Rev. 05

HTS™ Snowplow

Blade Assembly 69500
Center Assembly 69525-1, 69525-3

Parts List

A DIVISION OF DOUGLAS DYNAMICS, LLC

TABLE OF CONTENTS

HTS™ BLADE ASSEMBLY 4
HTS CENTER ASSEMBLY 6
Lift Frame and A-Frame Components 6
Hydraulic Unit Components 8
Lift and Angle Ram Components 10
Hoses and Fittings 11
Electrical Components 12
Vehicle-Side Harness Diagram – 3-Port, 2-Plug Systems 13
Headlamp Kits 14–15

Blade Components

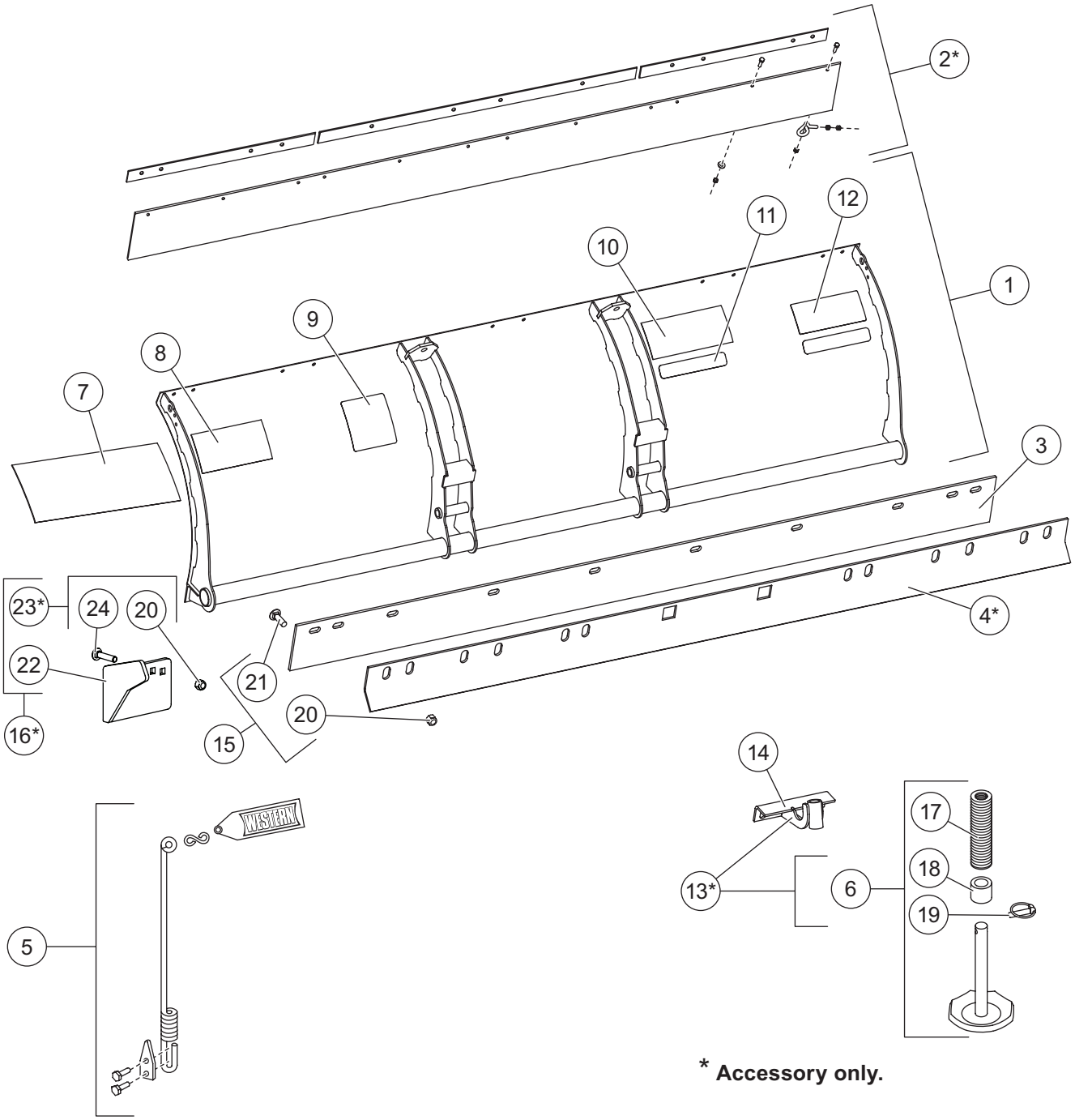

*** Accessory only.**

69500 Blade Components							
Item	**Part**	**Qty**	**Description**	**Item**	**Part**	**Qty**	**Description**
1	69490	1	7'6" Blade	11	28404	1	Label – Identity, ULTRAFINISH™
2*	62123-1	1	Rubber Deflector Kit, 7'6"	12	44451	1	Label – Identity, WESTERN 8.31
3	69505	1	5/16 x 6 x 90 Cutting Edge (w/o hardware)	ns	69499	1	Cutting Edge Assembly (w/hardware)
				13*	69570	1	Shoe Kit
4*	64758	1	Back Drag Edge, 7'6"	14	69455	2	Shoe Bracket
5	59700	1	Blade Guide & Flag Assembly Kit, 24"	15	69425	1	Cutting Edge Bolt Bag
6	49067	2	Disc Shoe Assembly	16*	43885	1	Curb Guard Kit
7	69489	1	Label – Identity, WESTERN® Moldboard	17	91192	52	Round Flat Washer, Special
8	74593	1	Label – Warning, Attach/Detach	18	60045	2	Spacer
9	59900	1	Label – Warning/Caution, Snowplows	19	93010K	2	7/16 x 1-3/4 Linchpin
10	94859	1	Label – Identity, HTS				
Item 5			**59700 Blade Guide & Flag Assembly Kit, 24"**				
	59691	2	Blade Guide Rod 24"		59946	2	Clamp
	59696	2	S-Hook		68494	4	5/16-18 x 1 Hex Cap Screw G5
	59694K	2	Blade Guide Flag		91332	4	5/16-18 Hex Locknut GB
Item 6			**49067 Disc Shoe Assembly**				
		1	Disc Shoe	18	60045	1	Spacer
17	91192	26	Round Flat Washer, Special	19	93010K	1	7/16 x 1-3/4 Linchpin
Item 13*			**69570 Shoe Kit**				
6	49067	2	Disc Shoe Assembly	14	69455	2	Shoe Bracket
Item 15			**69425 Cutting Edge Bolt Bag**				
20		10	5/8-11 Hex Locknut GB	21		10	5/8-11 x 2 Carriage Bolt G5
Item 16*			**43885 Curb Guard Kit**				
22	43896	1	Curb Guard – DS	23*	44421	1	Curb Guard Bolt Bag
ns	43897	1	Curb Guard – PS				
Item 23*			**44421 Curb Guard Bolt Bag**				
20		4	5/8-11 Hex Locknut GB	24		4	5/8-11 x 3 Carriage Bolt G5
ns = not shown				G = Grade			

* Accessory only.

Lift Frame and A-Frame Components

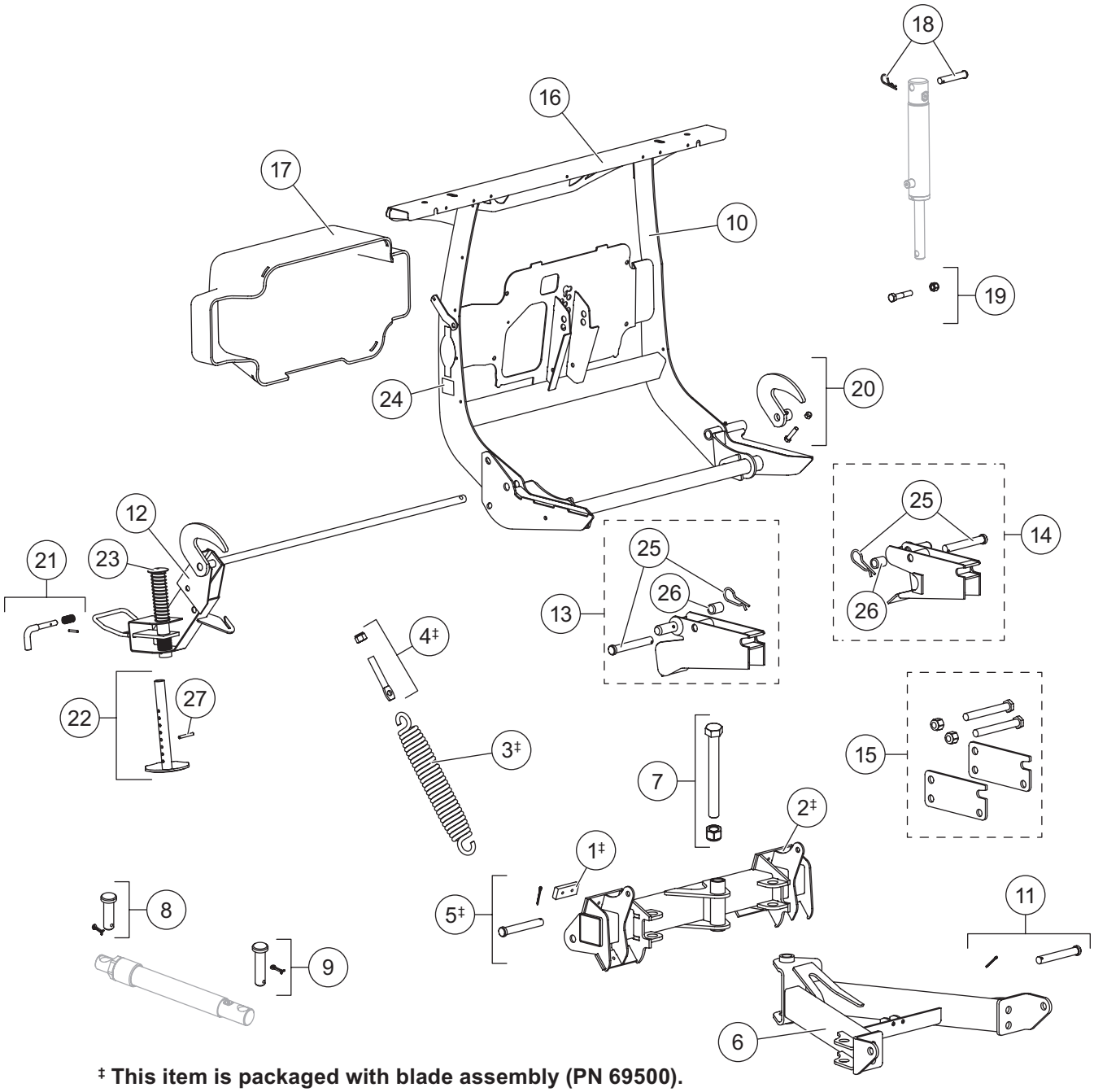

‡ **This item is packaged with blade assembly (PN 69500).**

HTS Lift Frame and A-Frame Components							
Item	**Part**	**Qty**	**Description**	**Item**	**Part**	**Qty**	**Description**
1‡	63976	1	Bumper Kit	13	69611	1	Receiver Kit – DS
2‡	69515	1	Quadrant Assembly, HTS	14	69610	1	Receiver Kit – PS
3‡	23039	2	Trip Spring	15	69620	1	Height Adjustment Plates Kit (qty 2)
4‡	66421	2	5/8-11 x 4 Eyebolt Kit	16	69509	1	Light Bar
5‡	69659	2	3/4 x 6 Clevis Pin Kit	17	69512	1	Hydraulic Cover
6	69523	1	A-Frame	18	50653	1	5/8 x 3-1/2 Pin Kit
7	69494	1	Pivot Bolt Kit	19	69514	1	Lift Ram Pin Kit (Rod)
8	63973	2	Ram Pin Kit	20	69508	1	Hook w/Hardware – PS
9	69496	2	Ram Pin Kit	21	67844	1	Stand Lock Pin Kit
10	69497	1	Lift Frame Kit	22	67847	1	Stand Shoe Kit
11	93062K	2	Clevis Pin Kit	23	48523	1	Stand Plunger Assembly
12	69498	1	Stand Assembly	24	69689	1	Label – Identity, SECURITY GUARD™
Item 13			**69611 Receiver Kit – DS**				
		1	Receiver – DS	26	63212	1	Spacer
25	69663	1	Receiver Retaining Pin Kit				
Item 14			**69610 Receiver Kit – PS**				
		1	Receiver – PS	26	63212	1	Spacer
25	69663	1	Receiver Retaining Pin Kit				
Item 22			**67847 Stand Shoe Kit**				
		1	Stand Shoe	27	67635	1	1/4 x 2 Roll Pin BP

‡ Packaged with blade assembly (PN 69500).

Hydraulic Unit Components

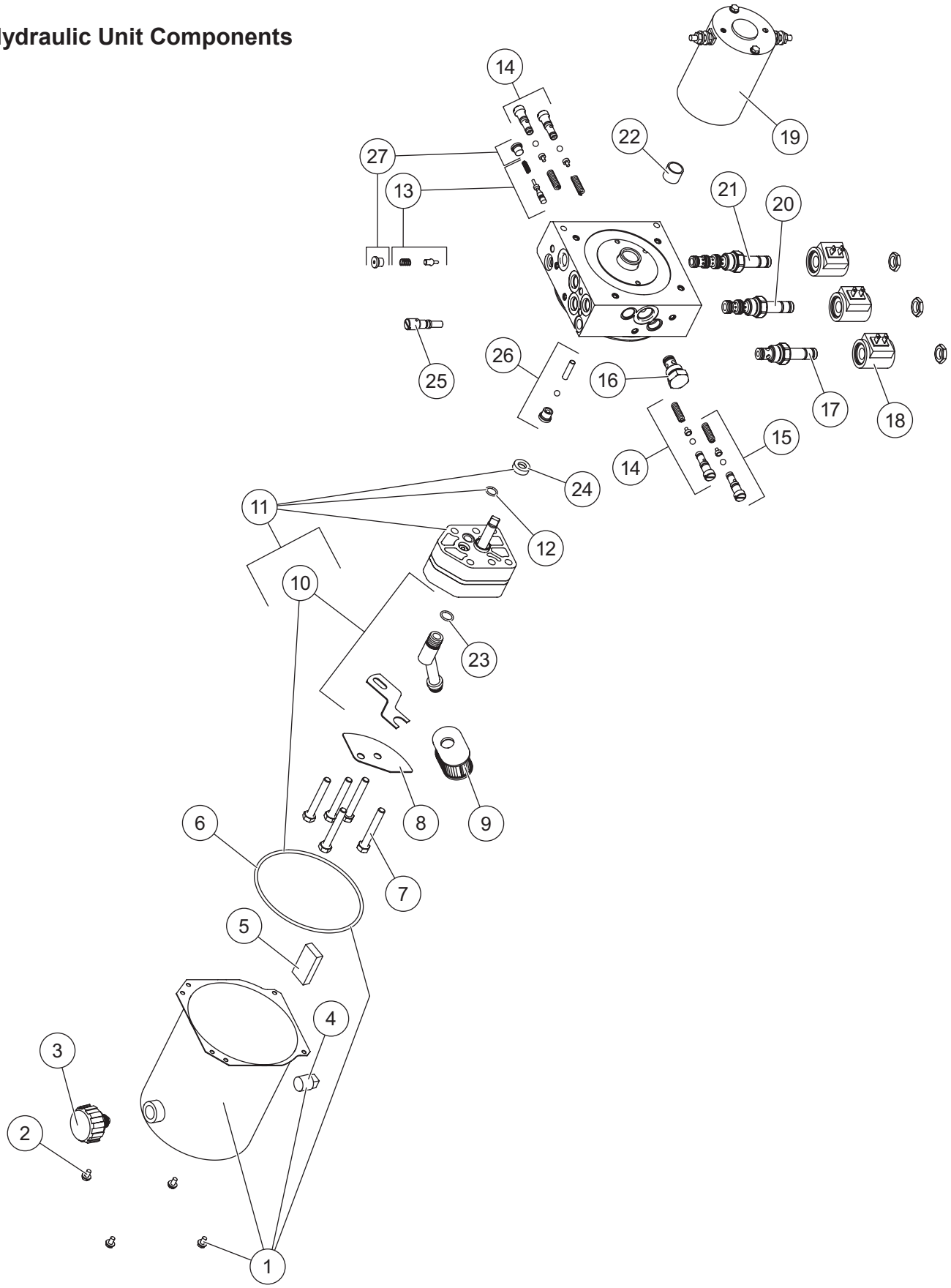

69630 Hydraulic Unit (incl. electrical components on page 12)							
Item	**Part**	**Qty**	**Description**	**Item**	**Part**	**Qty**	**Description**
1	48538	1	Reservoir Kit	14	49138K-5	1-1/2	Relief Valve Kit (2 sets)
2	66607	4	#10-24 x 5/16 Slotted Hex Washer-Head Machine Screw	15	27792-1	1	Relief Valve Repair Kit
				16	44334-1	1	Check Valve CV08-20
3	21727-2K	1	Breather 3/8 NPT Kit	17	49227K-2	1	Valve, 2-Way w/Nut
4	92079	1	Plug, Square 3/8 NPTF	18	49230K-2	3	Coil w/Spade Terminals
5	73897	1	Magnet	19	48543-1	1	Motor Assembly, 3"
6	66519	1	O-Ring 2-250	20	66608-1	1	Valve, 3-Way w/Nut
7	90073	5	5/16-18 x 2-1/4 Hex Cap Screw G5	21	49229K-1	1	Valve, 4-Way w/Nut
8	48464	1	Plate Baffle	22	56364*	1	Bearing, Sleeve
9	56789-5	1	Suction Filter	23	56416	1	O-Ring -014
10	66763-1	1	Inlet Fitting/Filter Kit	24	66515**	1	Pump Shaft Seal
11	21501-1	1	Hydraulic Pump Kit	25	48517	1	Quill
12	56274	1	O-Ring -013	26	48518	1	Check Valve Assembly
13	49226K	1	Poppet Check Valve Kit	27	92960	2	Plug, Hex Socket –3 M ORB
O-Ring Service Kits							
ns	56657-6	–	O-Ring & Back-Up Ring Kit	ns	49259-2	–	Seal Kit, 3-Way and 4-Way Valve
ns	49258-2	–	Seal Kit, 2-Way Valve				
ns = not shown			M = Male				G = Grade

* Use 64589 tool to install (includes 56364).

** Use 28856 tool to install (includes 66515).

Lift and Angle Ram Components

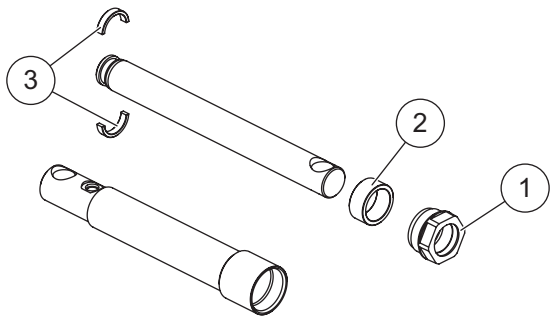

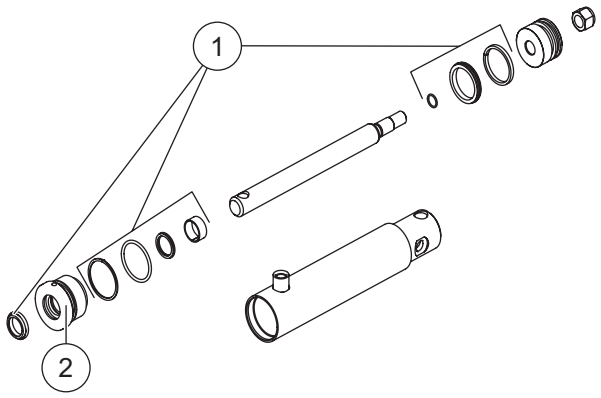

69495 Angle Ram Assembly 1-1/2 x 8			
Item	**Part**	**Qty**	**Description**
1	48985	1	Gland Nut Assembly 1-1/2
2	56537	1	Spacer
3	64650	1	Split Bearing Kit

69513 Lift Ram Assembly 2 x 6-3/4 DA			
Item	**Part**	**Qty**	**Description**
1	48520	1	Seal Kit 2 x 6-3/4 DA
2	48451	1	Gland Nut Assembly 1"

Hoses and Fittings

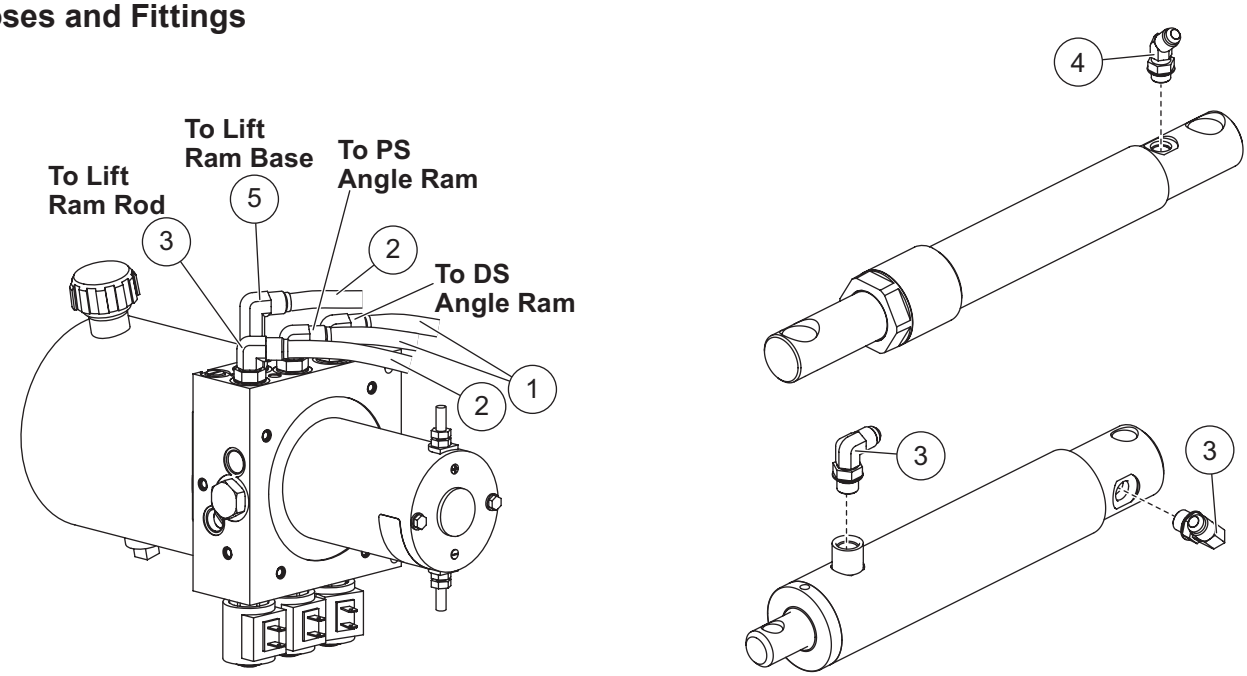

Hoses and Fittings							
Item	**Part**	**Qty**	**Description**	**Item**	**Part**	**Qty**	**Description**
1	48519	2	Hose, 1/4 x 32 w/F JIC Ends	5	64212-1	1	Elbow, Extra Long 90° –6 M JIC/ –6 M ORB
2	56830	2	Hose, 1/4 x 22 w/F JIC Ends				
3	56615-1	5	Elbow, 90° –6 M JIC/–6 M ORB	ns	56823	1	Hose Wrap
4	26694	2	Elbow, 45° –6 M JIC/–6 M ORB				
F = Female			M = Male				ns = not shown

Electrical Components

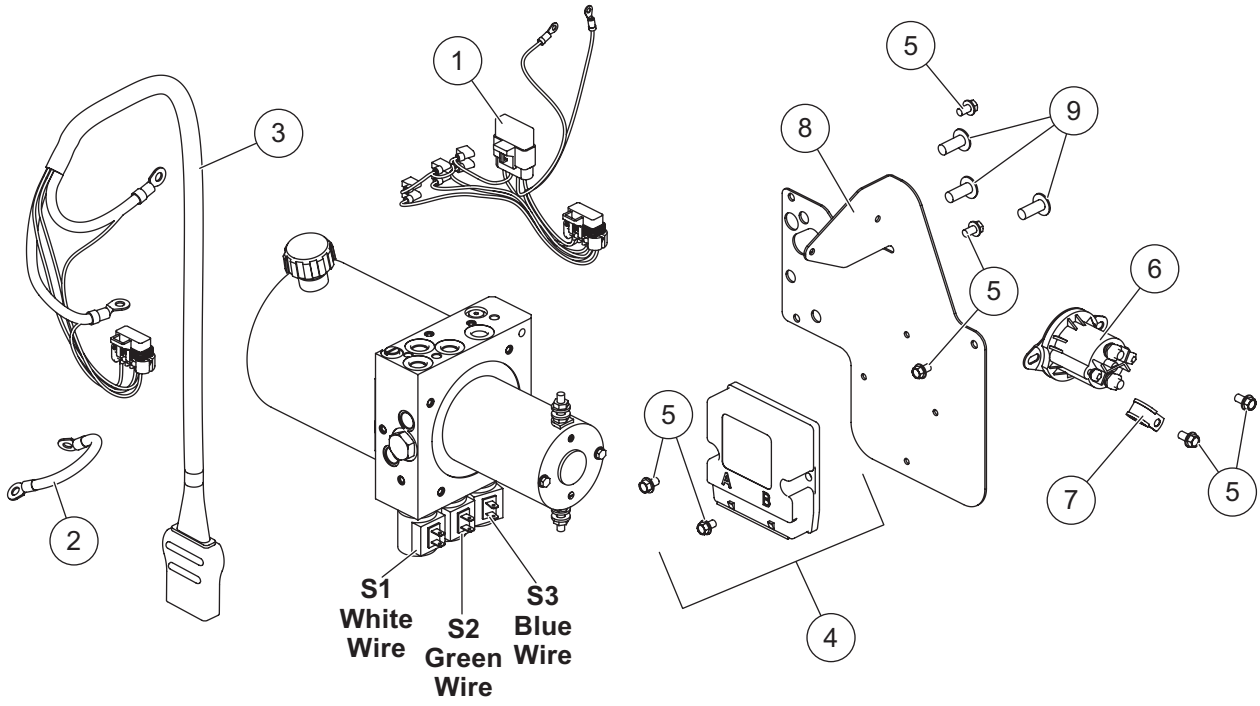

Plow-Side Electrical Components							
Item	**Part**	**Qty**	**Description**	**Item**	**Part**	**Qty**	**Description**
1	28581-1	1	Harness Plow Control, 3-Solenoid	6	42902	1	Motor Relay Kit FLEET FLEX System
2	29071	1	Cable Assembly 8"	7	65340	1	Clamp Loop #10
3	42015	1	Snowplow Battery Cable	8	48522	1	Hydraulic Plate
4	49567	1	Plow Module, 2-Port	9	72384-1	1	3/8-16 x 1 Serrated Flange Hex Cap Screw (pkg of 3)
5	43988	7	1/4-20 x 3/8 Hex Washer-Head Thread-Rolling Screw				
Vehicle-Side Electrical Components							
*	72527	1	Vehicle Battery Cable	ns	61548K	2	Plug Cover Kit
*	28587	1	Vehicle Control Harness				
ns = not shown							

* For diagram see Vehicle-Side Harness Diagram – 3-Port, 2-Plug System.

Vehicle-Side Harness Diagram
3-Port, 2-Plug System

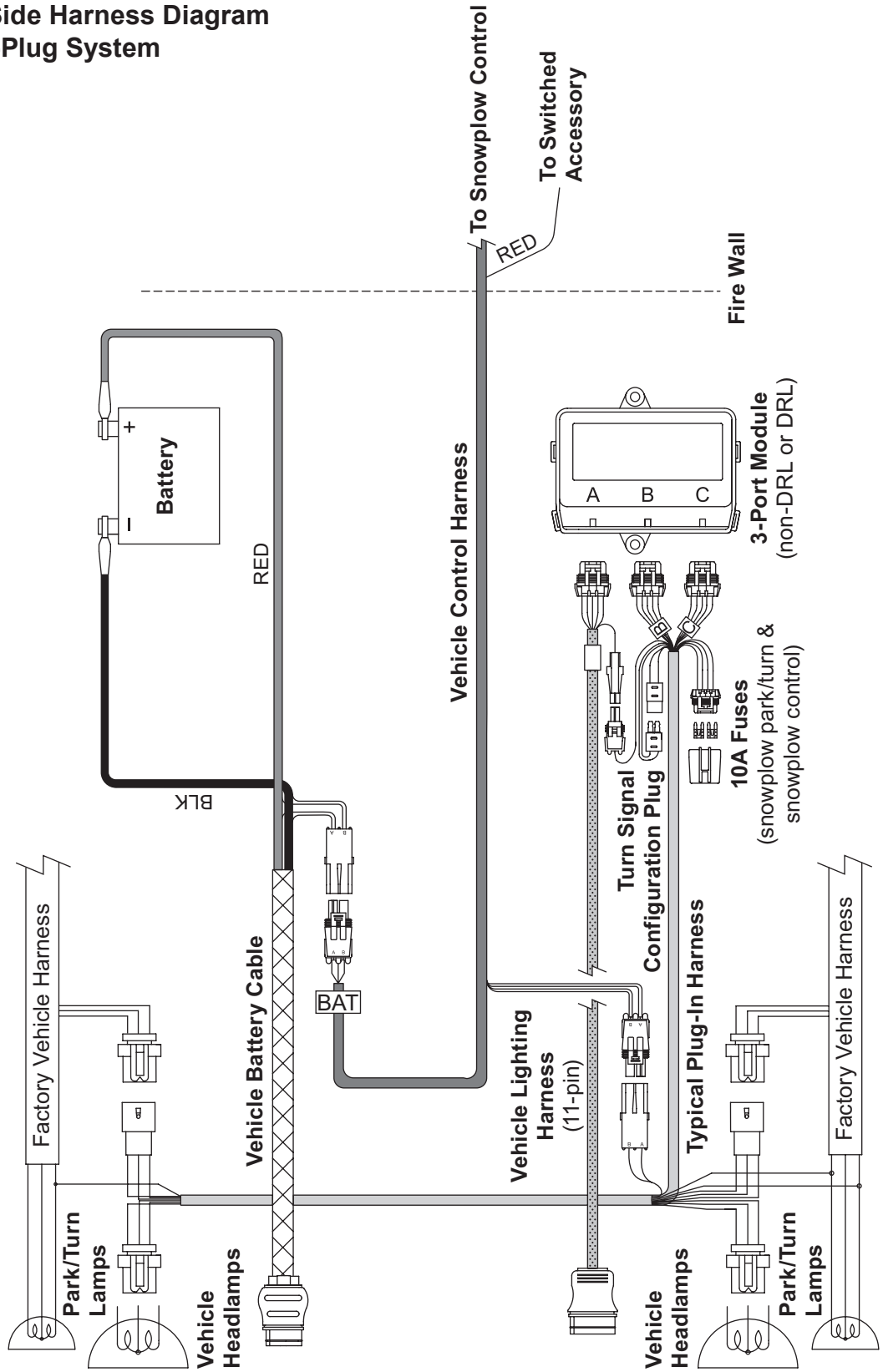

Headlamp Kit – Halogen

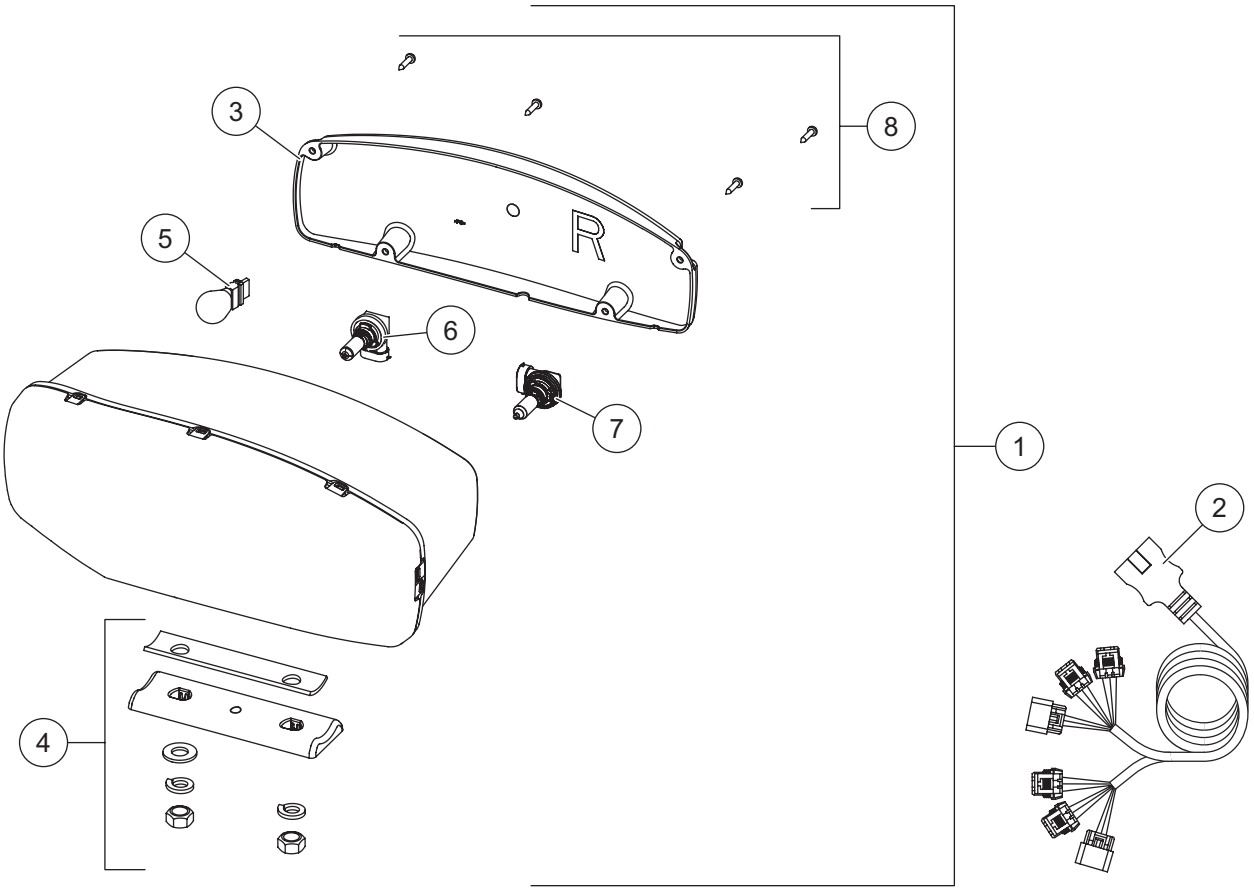

38800 Headlamp Kit H9/H11 (pair)							
Item	**Part**	**Qty**	**Description**	**Item**	**Part**	**Qty**	**Description**
1	38802	1	Headlamp Service Kit H9/H11 – PS	2	38807	1	Harness Service Kit H9/H11
ns	38801	1	Headlamp Service Kit H9/H11 – DS				
Item 1	**38801/38802 Headlamp Service Kit H9/H11 – PS/DS**						
3	38803	1	Rear Cover Kit H9/H11 – PS	6	38811	1	H11 Headlamp Bulb Service Kit
ns	38812	1	Rear Cover Kit H9/H11 – DS	7	38809	1	H9 Headlamp Bulb Service Kit
4	38804	1	Mounting Hardware Kit H9/H11	8	38808	1	Cover Screws Service Kit H9/H11 (pkg of 4)
5		1	Park/Turn Bulb (trade no. 4157NAK)				
ns = not shown							

Headlamp Kit – LED

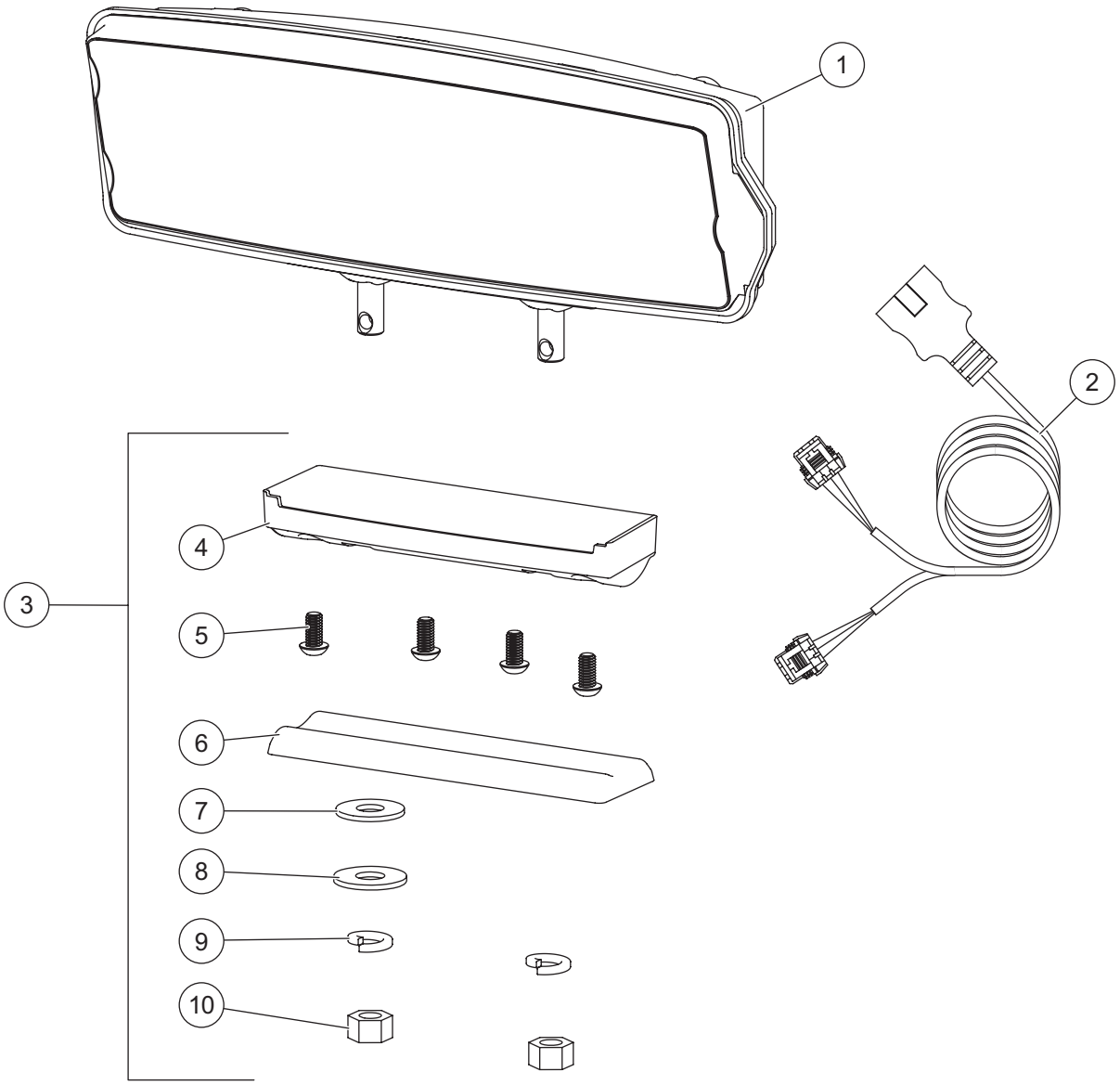

72560 Headlamp Kit LED (pair)							
Item	**Part**	**Qty**	**Description**	**Item**	**Part**	**Qty**	**Description**
1	39901	1	Headlamp Service Kit LED – DS	3	39903	1	Mounting Hardware Kit LED
ns	39902	1	Headlamp Service Kit LED – PS	ns	72512	1	LED Harness Connector Cover (pkg of 2)
2	72548	1	Harness Service Kit LED				
Item 3			**39903 Mounting Hardware Kit LED**				
4		1	Plastic Casing	8		1	1/2 Flat Washer
5		4	1/4 Button Cap Screw	9		2	1/2 Lock Washer
6		1	Headlamp Swivel	10		2	1/2 Hex Nut
7		1	1/2 Rubber Washer	ns		1	Metal Insert
ns = not shown							

Western Products
PO Box 245038
Milwaukee, WI 53224-9538
www.westernplows.com

A DIVISION OF DOUGLAS DYNAMICS, LLC

Copyright © 2006 Douglas Dynamics, LLC. All rights reserved. This material may not be used, reproduced, or copied in any manner, in whole or in part, in any printed, mechanical, electronic, film, or other distribution and storage media, nor analyzed or manipulated in any manner for the purpose of training artificial intelligence technologies or systems, without the written consent of Western Products. In accordance with Article 4(3) of the Digital Single Market Directive 2019/790, Western Products expressly reserves this work from the text and data mining exception. Authorization to photocopy items for internal or personal use by Western Products outlets or equipment owner is granted.

Western Products reserves the right under its product improvement policy to change construction or design details and furnish equipment when so altered without reference to illustrations or specifications used. Western Products or the vehicle manufacturer may require or recommend optional equipment for snow removal. Do not exceed vehicle ratings with a snowplow. Western Products offers a limited warranty for all equipment and accessories. See separately printed page for this important information. The following are registered (®) or unregistered (™) trademarks of Douglas Dynamics, LLC: HTS™, SECURITY GUARD™, ULTRAFINISH™, UltraMount®, WESTERN®.

Printed in U.S.A.